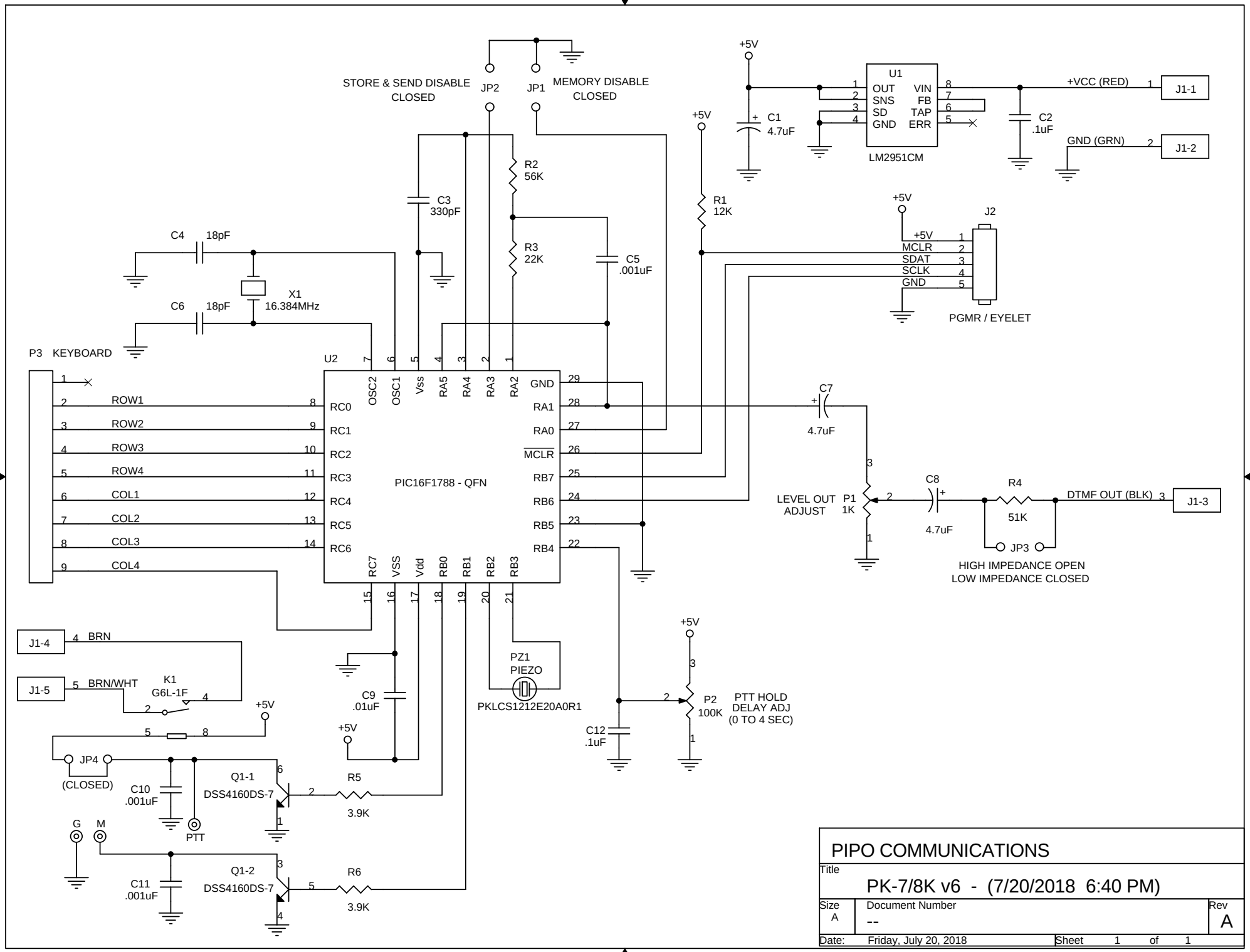

PIPO COMMUNICATIONS

Title: PK-7/8K v6 - (7/20/2018 6:40 PM)

Size: A | Document Number: -- | Rev: A

Date: Friday, July 20, 2018 | Sheet 1 of 1